BULLETIN: 29001

PROBLEM Solver™ BULLETIN

www.moogproblemsolver.com

Premature Tie Rod End Failure

1995-2003 Ford Windstar

PROBLEM:

Premature tie rod end failure

Water and contaminants leak past the boot retaining ring, causing corrosion and accelerated wear. Original non-serviceable design is unable to flush contaminants.

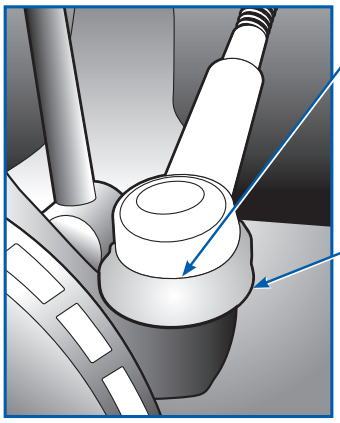

Water gets trapped in lip of dust boot, then seeps past retaining ring.

Inspection: With vehicle on the ground, have an assistant rotate the steering wheel back and forth. Observe the tie rod ends for movement. A tie rod exhibiting any perceptible movement should be replaced.

Per revised manufacturer's inspection procedure, lift the bottom of the boot and inspect the tie rod stud. The part should be replaced if there is any sign of water or corrosion.

Description	Years	Make/Model	Replacement Part Number
Outer Tie Rod End	1995-2003	Ford Windstar	ES3181RL

SOLUTION:

MOOG® ES3181RL

- Greaseable design allows fresh grease to displace any accumulated debris away from the ball and bearing assembly.
- The grease-relief valve in the sealed boot shuts out moisture and debris, while ensuring proper fill levels by releasing excess grease, which is directed away from vital brake components.
- Coated powdered-metal gusher bearing technology provides smoother steering feel, and allows lubrication to penetrate the bearing service for longer life.

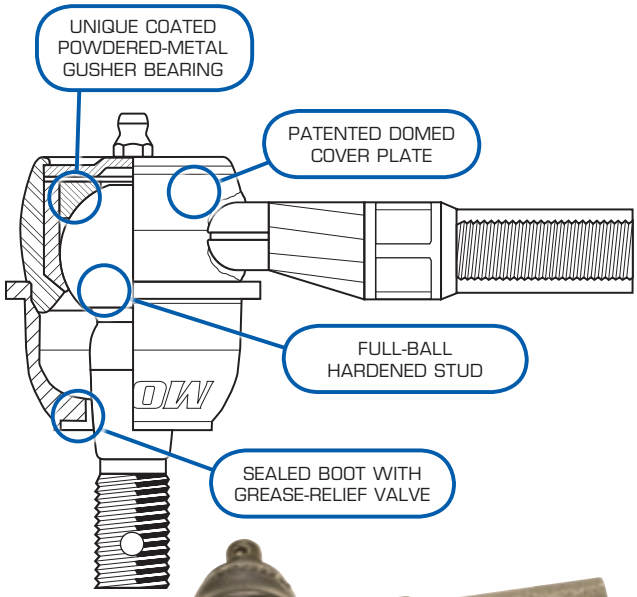

ES3181RL

MOOG®

THE PROBLEM SOLVER™

Be Car Care Aware™

FEDERAL-MOGUL MOTORPARTS

©2015 Federal-Mogul Motorparts Corporation. NASCAR is a registered trademark of NASCAR, Inc. MOOG and The Problem Solver are trademarks owned by Federal-Mogul Corporation, or one or more of its subsidiaries, in one or more countries. All other trademarks are the property of their respective owners. All rights reserved. Form# MG29001